instructions

Kit 1086

NISSAN King Cab, 2-dr, 86-97
NISSAN King Cab, 2-dr, 98-01, 02–
NISSAN King Cab, 2-dr Extended Cab, 86-97
NISSAN King Cab, 2-dr Extended Cab, 98-01, 02–
NISSAN King Cab, 4-dr Double Cab, 86-97
NISSAN King Cab, 4-dr Double Cab, 98-01, 02–
NISSAN Pathfinder (WD21), 3-dr SUV, 86-96
NISSAN Pathfinder (WD21), 5-dr SUV, 89-96
NISSAN Terrano (WD21), 3-dr SUV, 86-96
NISSAN Terrano (WD21), 5-dr SUV, 86-96

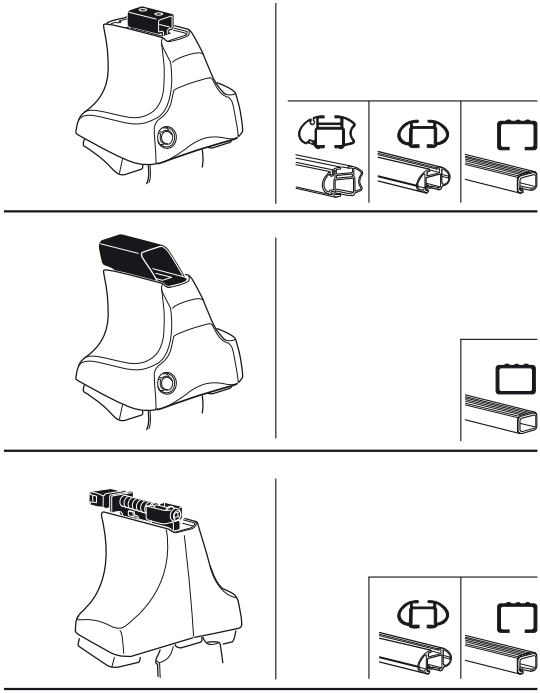

THULE® SWEDEN

c.20090511.503-1086

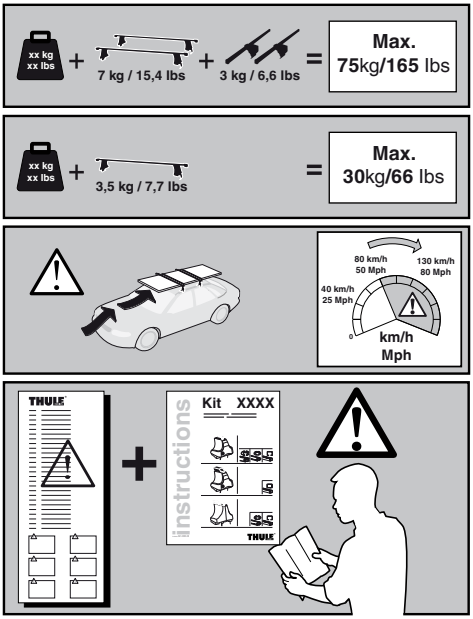
xx kg
xx lbs
7 kg / 15,4 lbs
3 kg / 6,6 lbs
Max.
75kg/165 lbs
xx kg
xx lbs
3,5 kg / 7,7 lbs
Max.
30kg/66 lbs
80 km/h
50 Mph
130 km/h
80 Mph
40 km/h
25 Mph
0
km/h
Mph
THULE
Kit XXXX
instructions
THULE

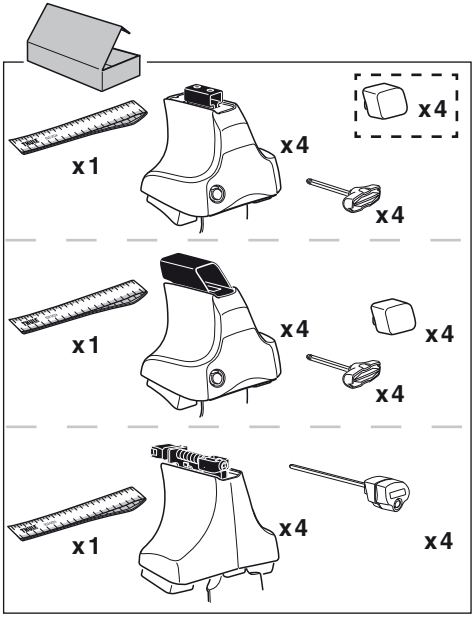
x 1
x 4
x 4
x 4
x 1
x 4
x 4
x 4
x 1
x 4
x 4

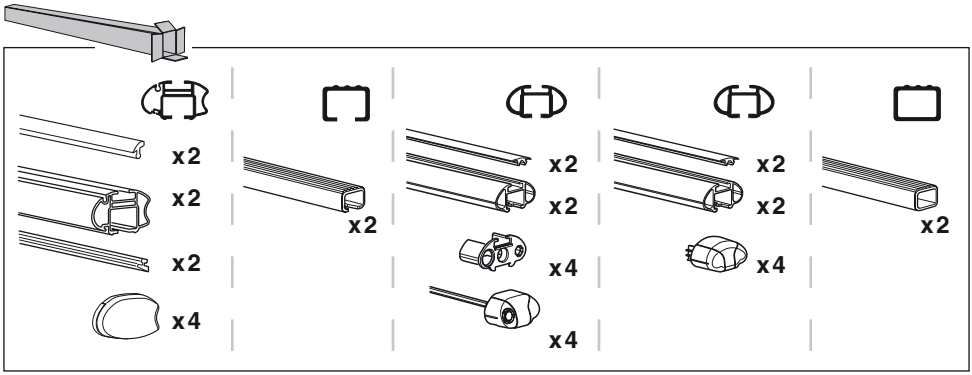
x 2
x 2
x 2
x 4
x 2
x 2
x 2
x 4
x 4
x 2
x 2
x 2
x 4
x 2

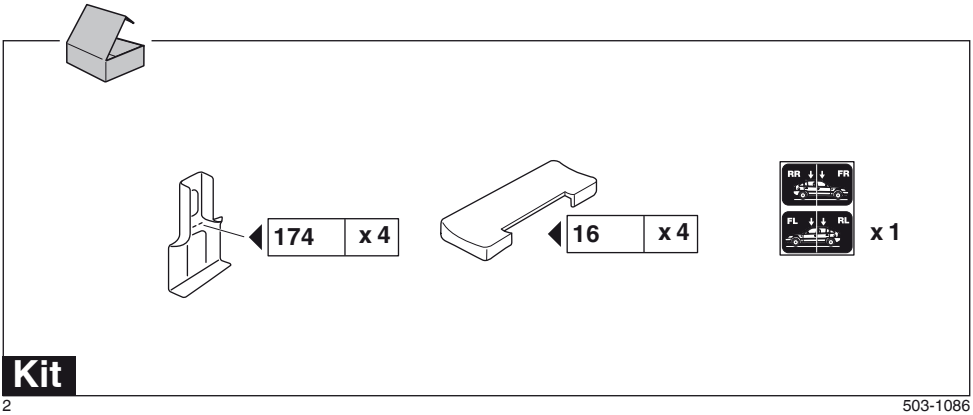
174
x 4
16
x 4
RR
FR
FL
RL
x 1

Kit

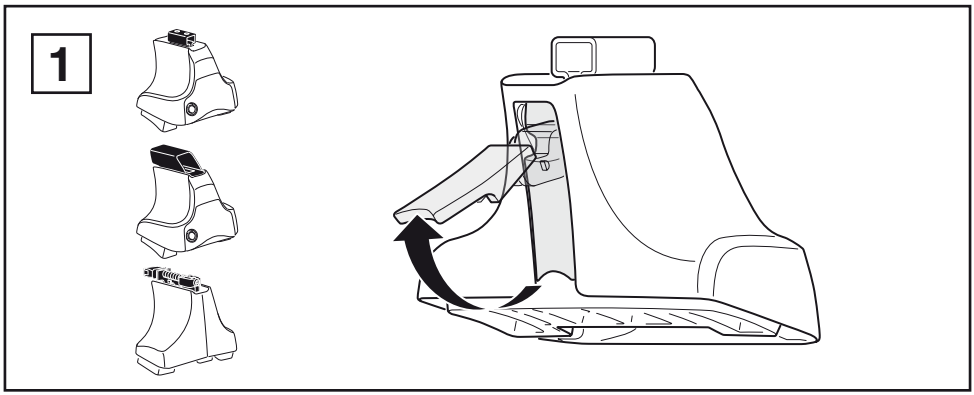
1

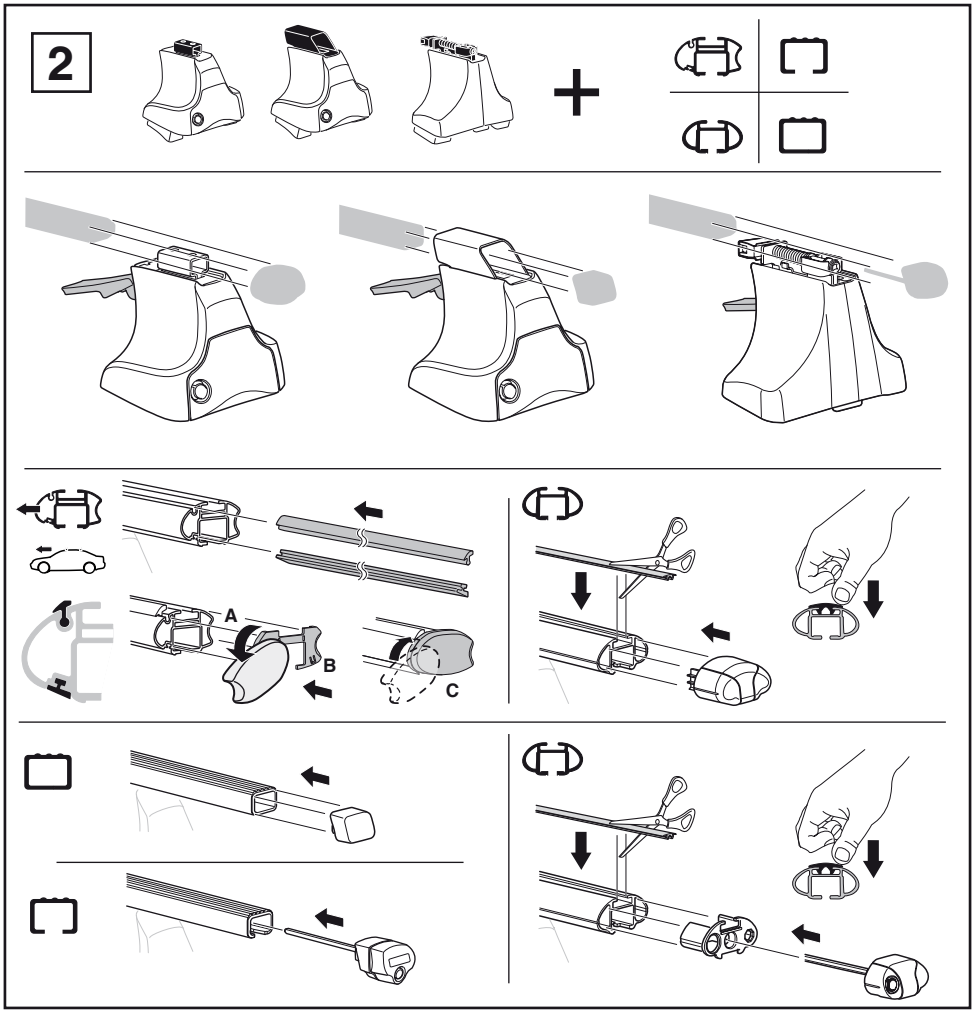
2
A
B
C

3

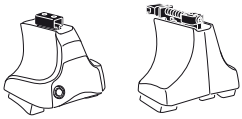

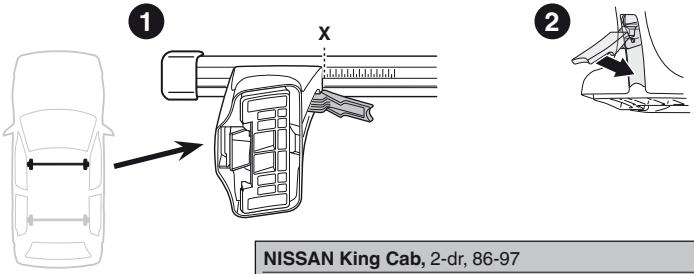

	X
NISSAN King Cab, 2-dr, 86-97	**38**
NISSAN King Cab, 2-dr, 98-01, 02–	**37,5**
NISSAN King Cab, 2-dr Extended Cab, 86-97	**38**
NISSAN King Cab, 2-dr Extended Cab, 98-01, 02–	**37,5**
NISSAN King Cab, 4-dr Double Cab, 86-97	**38**
NISSAN King Cab, 4-dr Double Cab, 98-01, 02–	**38**
NISSAN Pathfinder (WD21), 3-dr SUV, 86-96	**38**
NISSAN Pathfinder (WD21), 5-dr SUV, 89-96	**37**
NISSAN Terrano (WD21), 3-dr SUV, 86-96	**37**
NISSAN Terrano (WD21), 5-dr SUV, 86-96	**37**

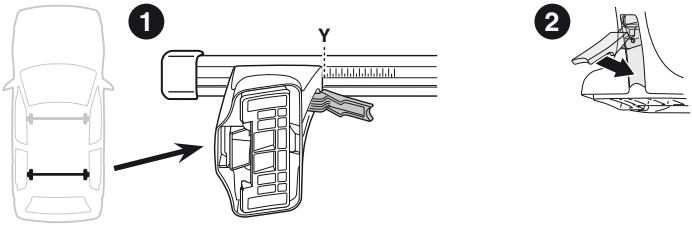

	Y
NISSAN King Cab, 2-dr, 86-97	**–**
NISSAN King Cab, 2-dr, 98-01, 02–	**–**
NISSAN King Cab, 2-dr Extended Cab, 86-97	**–**
NISSAN King Cab, 2-dr Extended Cab, 98-01, 02–	**–**
NISSAN King Cab, 4-dr Double Cab, 86-97	**38**
NISSAN King Cab, 4-dr Double Cab, 98-01, 02–	**37,5**
NISSAN Pathfinder (WD21), 3-dr SUV, 86-96	**38**
NISSAN Pathfinder (WD21), 5-dr SUV, 89-96	**37**
NISSAN Terrano (WD21), 3-dr SUV, 86-96	**37**
NISSAN Terrano (WD21), 5-dr SUV, 86-96	**37**

3

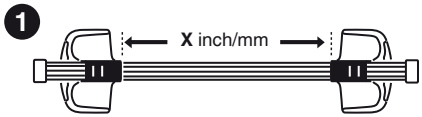

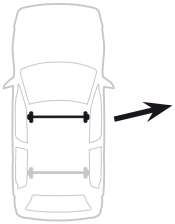

	X inch	X mm
NISSAN King Cab, 2-dr, 86-97	**40 5/8 ”**	**1031** mm
NISSAN King Cab, 2-dr, 98-01, 02–	**40 3/8 ”**	**1026** mm
NISSAN King Cab, 2-dr Extended Cab, 86-97	**40 5/8 ”**	**1031** mm
NISSAN King Cab, 2-dr Extended Cab, 98-01, 02–	**40 3/8 ”**	**1026** mm
NISSAN King Cab, 4-dr Double Cab, 86-97	**40 5/8 ”**	**1031** mm
NISSAN King Cab, 4-dr Double Cab, 98-01, 02–	**40 5/8 ”**	**1031** mm
NISSAN Pathfinder (WD21), 3-dr SUV, 86-96	**40 5/8 ”**	**1031** mm
NISSAN Pathfinder (WD21), 5-dr SUV, 89-96	**40 1/4 ”**	**1021** mm
NISSAN Terrano (WD21), 3-dr SUV, 86-96	**40 1/4 ”**	**1021** mm
NISSAN Terrano (WD21), 5-dr SUV, 86-96	**40 1/4 ”**	**1021** mm

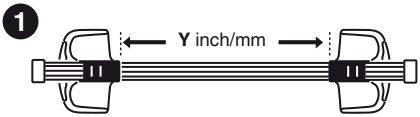

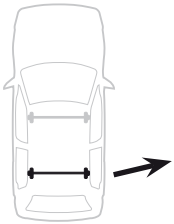

	X inch	X mm
NISSAN King Cab, 2-dr, 86-97	–	–
NISSAN King Cab, 2-dr, 98-01, 02–	–	–
NISSAN King Cab, 2-dr Extended Cab, 86-97	–	–
NISSAN King Cab, 2-dr Extended Cab, 98-01, 02–	–	–
NISSAN King Cab, 4-dr Double Cab, 86-97	**40 5/8 ”**	**1031** mm
NISSAN King Cab, 4-dr Double Cab, 98-01, 02–	**40 3/8 ”**	**1026** mm
NISSAN Pathfinder (WD21), 3-dr SUV, 86-96	**40 5/8 ”**	**1031** mm
NISSAN Pathfinder (WD21), 5-dr SUV, 89-96	**40 1/4 ”**	**1021** mm
NISSAN Terrano (WD21), 3-dr SUV, 86-96	**40 1/4 ”**	**1021** mm
NISSAN Terrano (WD21), 5-dr SUV, 86-96	**40 1/4 ”**	**1021** mm

4

NISSAN King Cab, 2-dr, 86-97
NISSAN King Cab, 2-dr, 98-01, 02–
NISSAN King Cab, 2-dr Extended Cab, 86-97
NISSAN King Cab, 2-dr Extended Cab, 98-01, 02–

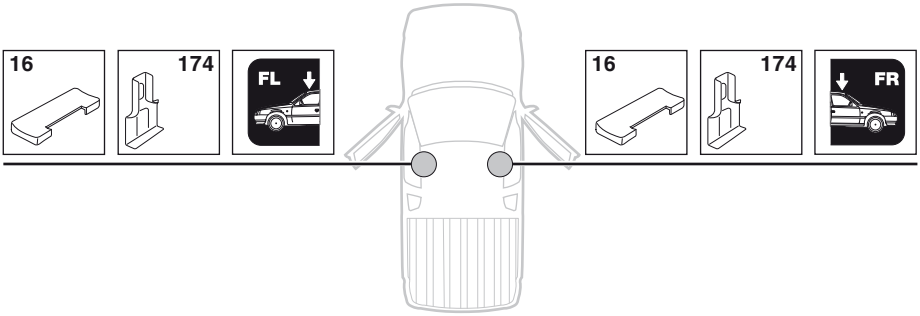

NISSAN Pathfinder (WD21), 3-dr SUV, 86-96
NISSAN Terrano (WD21), 3-dr SUV, 86-96

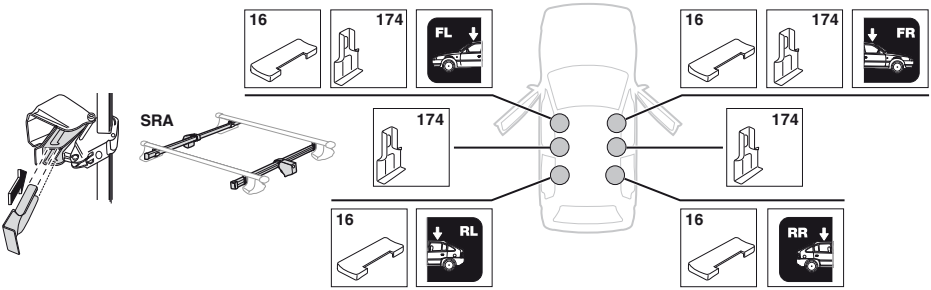

4

NISSAN King Cab, 4-dr Double Cab, 86-97
NISSAN King Cab, 4-dr Double Cab, 98-01, 02–
NISSAN Pathfinder (WD21), 5-dr SUV, 89-96
NISSAN Terrano (WD21), 5-dr SUV, 86-96

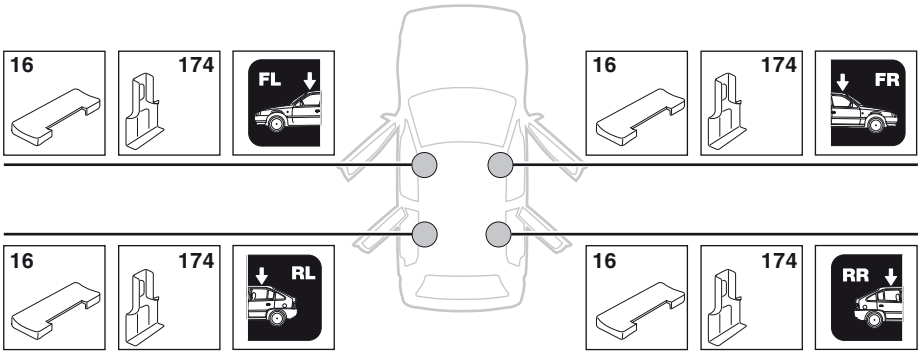

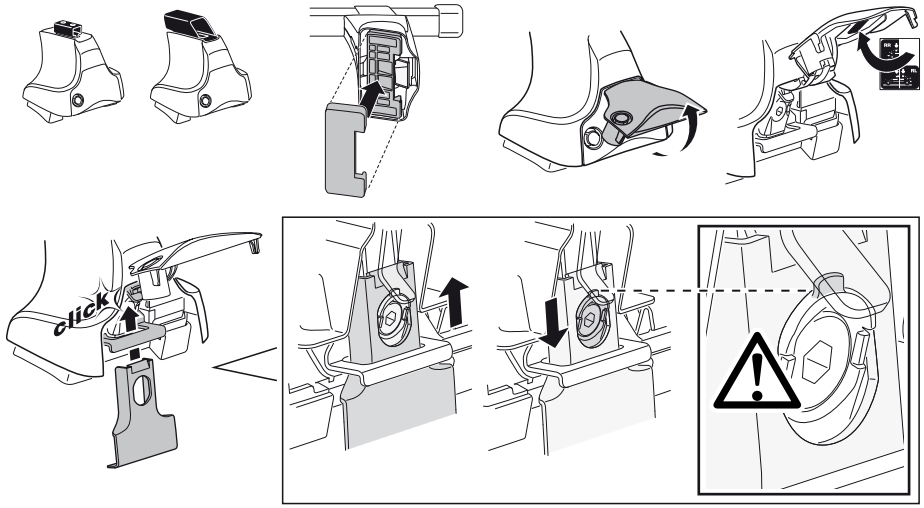

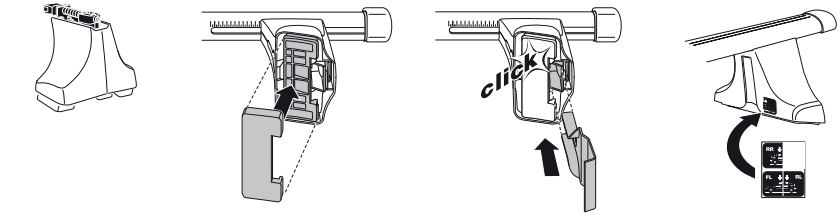

5

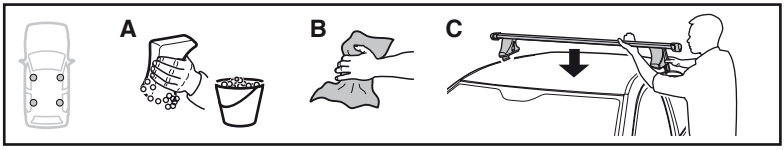

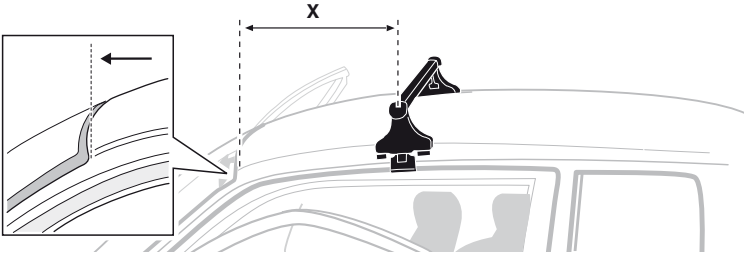

	X mm	**Y** mm	**X** inch	**Y** inch
NISSAN King Cab, 2-dr, 86-97	**280** mm	–	**11** ”	–
NISSAN King Cab, 2-dr, 98-01, 02–	**260** mm	–	**10 1/4** ”	–
NISSAN King Cab, 2-dr Extended Cab, 86-97	**280** mm	–	**11** ”	–
NISSAN King Cab, 2-dr Extended Cab, 98-01, 02–	**245** mm	–	**9 5/8** ”	–

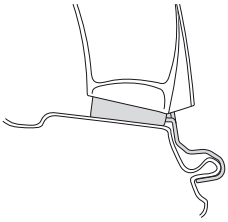

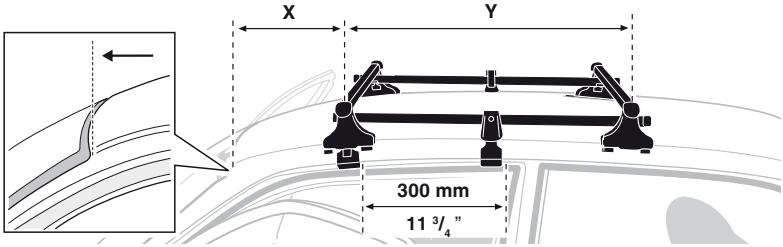

	X mm	**Y** mm	**X** inch	**Y** inch
NISSAN Pathfinder (WD21), 3-dr SUV, 86-96	**100** mm	**700** mm	**3 7/8** ”	**27 1/2** ”
NISSAN Terrano (WD21), 3-dr SUV, 86-96	**100** mm	**700** mm	**3 7/8** ”	**27 1/2** ”

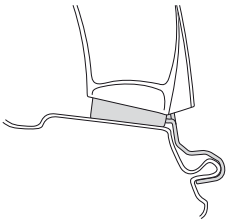

5

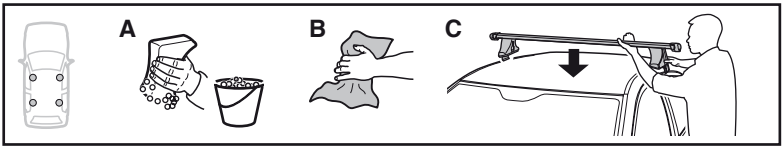

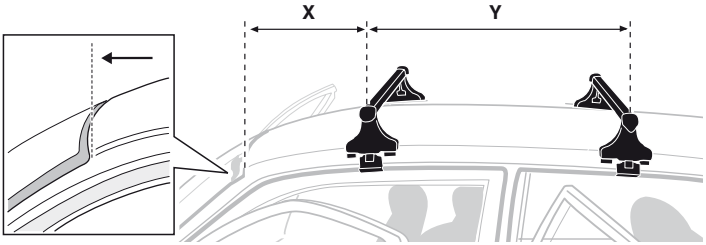

	X mm	Y mm	X inch	Y inch
NISSAN King Cab, 4-dr Double Cab, 86-97	**300** mm	**700** mm	**11 3/4 ”**	**27 1/2 ”**
NISSAN King Cab, 4-dr Double Cab, 98-01, 02–	**270** mm	**700** mm	**10 5/8 ”**	**27 1/2 ”**
NISSAN Pathfinder (WD21), 5-dr SUV, 89-96	**420** mm	**700** mm	**16 1/4 ”**	**27 1/2 ”**
NISSAN Terrano (WD21), 5-dr SUV, 86-96	**420** mm	**700** mm	**16 1/4 ”**	**27 1/2 ”**

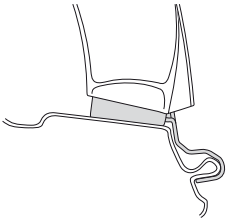

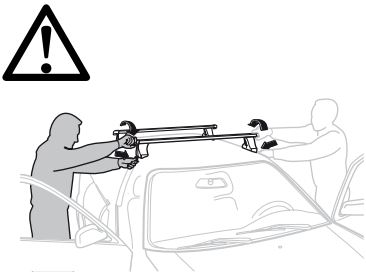

GB/US Tighten alternately
D Die Schrauben abwechselnd anziehen
F Serrer alternativement chaque côté
NL Afwisselend aan de linker- en de rechterkant aandraaien
I Alternare il serraggio delle viti
E Serrare alternativamente
PT Aperte alternadamente
S Dra åt växelvis
FIN Kierrä vuorotellen
EST Pinguldage vaheldumisi
LAT Pievelciet pamīšus
LIT Užsukinėkite pakaitomis
PL Śruby dokręcaj naprzemiennie
RU Затягивайте попеременно
CZ Pokrętła bagażnika dokręcaj dokręcaj naprzemiennie.
SK Doťahujte striedavo
SLO Privijajte izmenično.
HR Naizmjenično zategnite
HU Egymástól függetlenül szorítandó
GR Σφίγγετε εναλάξ
TR Dönüşümlü sıkın
中文 交替拧紧
한국어 번갈아 가며 조이십시오.
日本語 交互に締め付けてください。
ไทย ขันในแบบสลับ

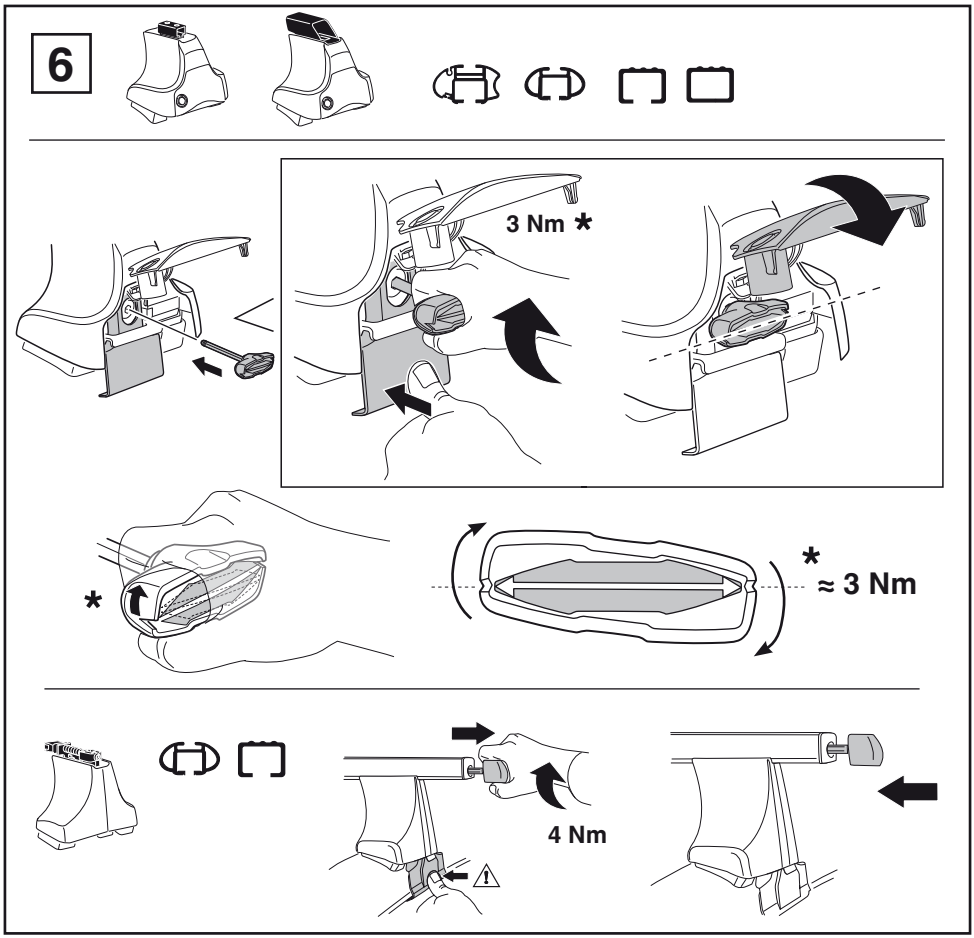
6
3 Nm *
*
*
≈ 3 Nm
4 Nm

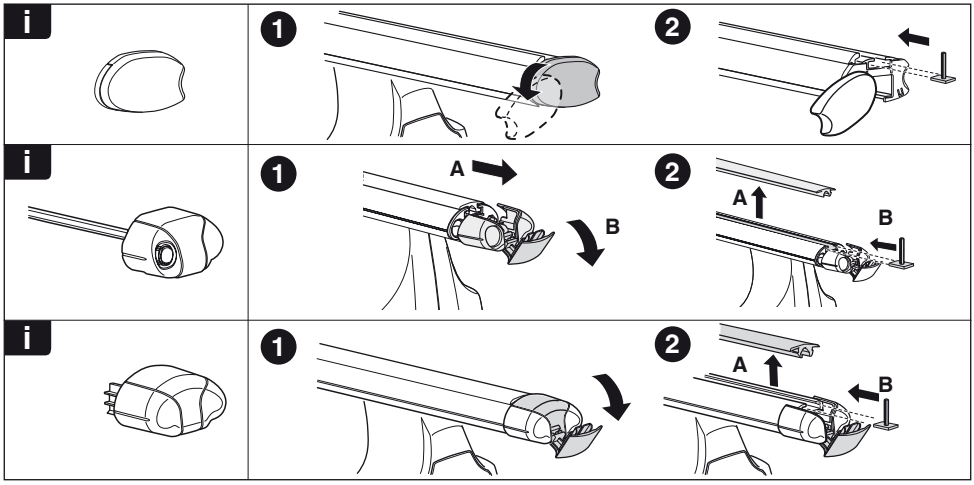
i
1
2
i
1
A
B
2
A
B
i
1
2
A
B

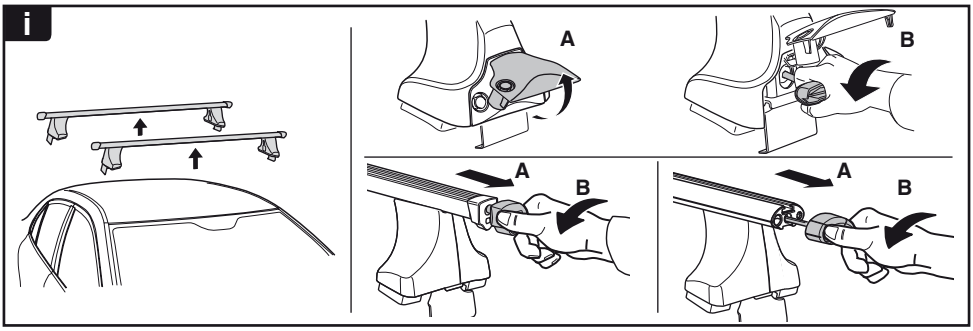

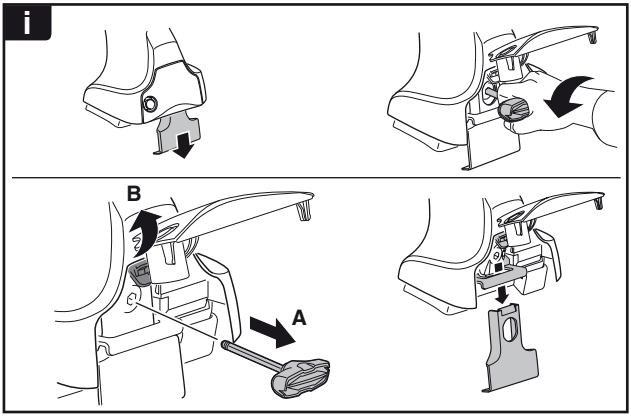

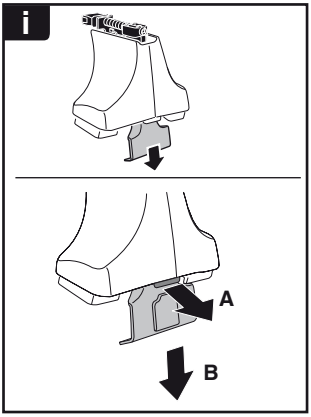

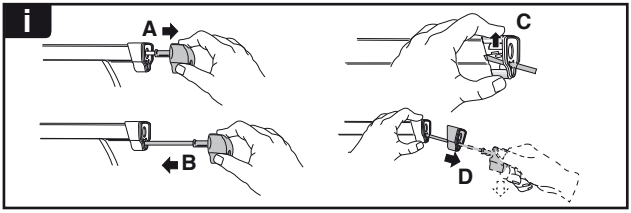

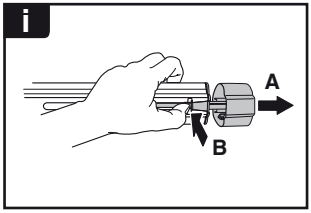

THULE SWEDEN

ONE KEY SYSTEM

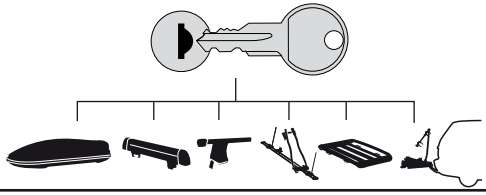

	544	(x4)
	596	(x6)
	588	(x8)
NA	510	(x10)
EUR ASIA	452	(x12)

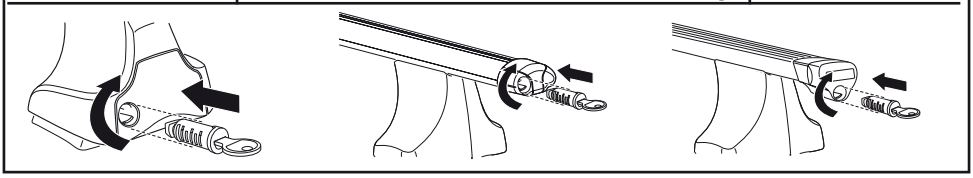

ww Thule Sweden AB, Box 69, 330 33 Hillerstorp, SWEDEN
NA Thule Inc., 42 Silvermine Road, Seymour, Connecticut 06483, USA
info@thule.com
customer.service@thule.com
www.thule.com

503-1086